Novanta PHOTONICS

ENGINEERED BY SYNRAD

vi SERIES CO_2 LASER DATA SHEET

INDUSTRY LEADING LASER WITH MORE THAN 30/40 W OF AVERAGE POWER FOR MARKING, ENGRAVING AND ABLATING

Next gen high performance CO_2 laser with customer-inspired features. The vi40 provides real-time temperature measurements of the laser's interior transmitted on user output line intervals of 250 ms for operating conditions feedback. The vi30+ includes an extended 2-year standard warranty period through a network of Novanta Service Centers.

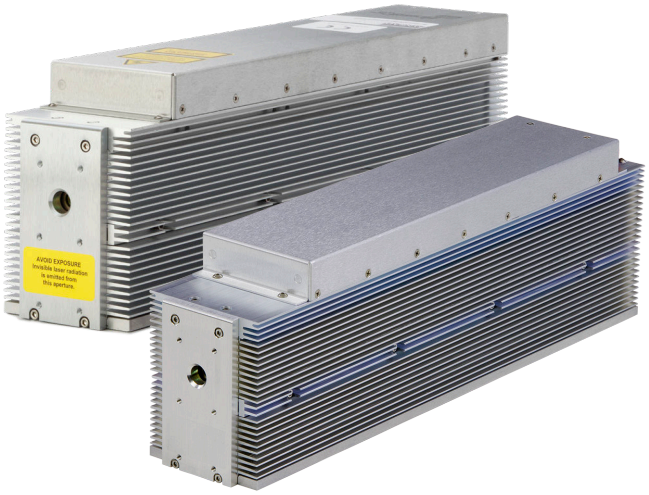

RECOMMENDED APPLICATIONS

Small footprint, light weight, and high resolution imagery engineered to fit a wide variety of automated manufacturing systems.

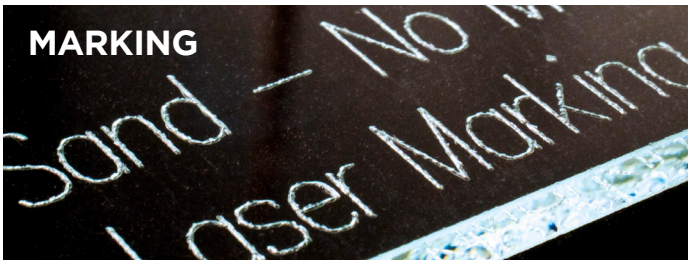

Powerful, accurate laser output that can be used on a wide variety of materials.

Stable operation over a wide range of settings enables precise control of material removal, allowing consistent ablation depth or detailed 3D engraving.

ENGINEERED FOR SEAMLESS INTEGRATION INTO HIGH-SPEED INDUSTRIAL EQUIPMENT

- Excellent thermal management delivers stable, high-power output and crisp beam quality for precise processing
- Fast rise/fall times enable high speed engraving, marking, and coding applications for high-volume manufacturers and processors
- Real-time condition monitoring (vi40) with an industry first temperature broadcast feature to avoid unexpected downtime and costly system repairs
- Multiple cooling options (vi30+) for greater integration flexibility
- Large dynamic range for marking and coding a wide variety of materials with stable power output, even at low duty cycles
- Multiple wavelength options (vi30+) to accommodate a wide range of material processing
- Uniform results from machine start through laser warm-up with excellent power stability
- Compact and lightweight, easily fits into tight spaces and onto weight sensitive systems

vi SERIES CO_2 LASER SPECIFICATIONS

Output Specifications	vi40	vi30+		
Wavelength	10.6 µm	9.3 µm	10.2 µm	10.6 µm
Output Power[1]	> 40 W	> 20 W	> 25 W	> 30 W
Power Stability (typical, after 3 min.)	± 3%	± 5%	± 3%	
Power Stability (cold start)[2]	± 5%	± 7%	± 5%	
Beam Quality (M^2)	< 1.2	< 1.2		
Beam Diameter[3]	2.5 mm ± 0.5 mm	2.5 mm ± 0.5 mm		
Divergence (full angle)	< 7.0 mrad	< 7.0 mrad		
Ellipticity	< 1.2	< 1.2		
Polarization	Linear (Horizontal)	Linear (Horizontal)		
Rise Time	< 100 µs	< 100 µs		
Operating Frequency	0 - 100 kHz	0 - 100 kHz		
Power Supply				
DC Voltage Input	48 VDC	48 VDC		
Maximum Current	10 A	10 A		
Cooling				
Maximum Heat Load	680 W	400 W		
Coolant Temperature	< 40° C (air)	< 60° C		
Minimum Flow Rate	190 CFM, 2 required (air)	140 CFM, 2 required (air) 4.0 GPM, < 60 PSI (water)		
Environmental				
Operating Ambient Temperatures	15 - 45° C	15 - 40° C		
Maximum Humidity	95%, non-condensing	95%, non-condensing		
Physical				
OEM Air Cooled Dimensions (LxWxH) mm (inches)	427 x 89 x 139 (16.8 x 3.5 x 5.5)	427 x 89 x 139 (16.8 x 3.5 x 5.5)		
Weight kg (lbs.)	6.7 kg (14.8 lbs.)	6.5 kg (14.3 lbs.)		

1 - Power level guaranteed for 1 year from date of shipment, regardless of operation hours, within recommended coolant flow rate and temperature range.
2 - Measured from cold start as $\pm(P_{max}-P_{min})/(P_{max}+P_{min})$
3 - Measured $1/e^2$ diameter at laser output.
Please see the manual for the full list of specifications and associated measurement conditions.

Invisible Laser Radiation
Avoid eye or skin exposure to direct of scattered radiation
Class 4 Laser Product.

vi SERIES CO_2 LASER - OUTLINE & MOUNTING ILLUSTRATIONS

Dimensions are in mm (inches)

vi40

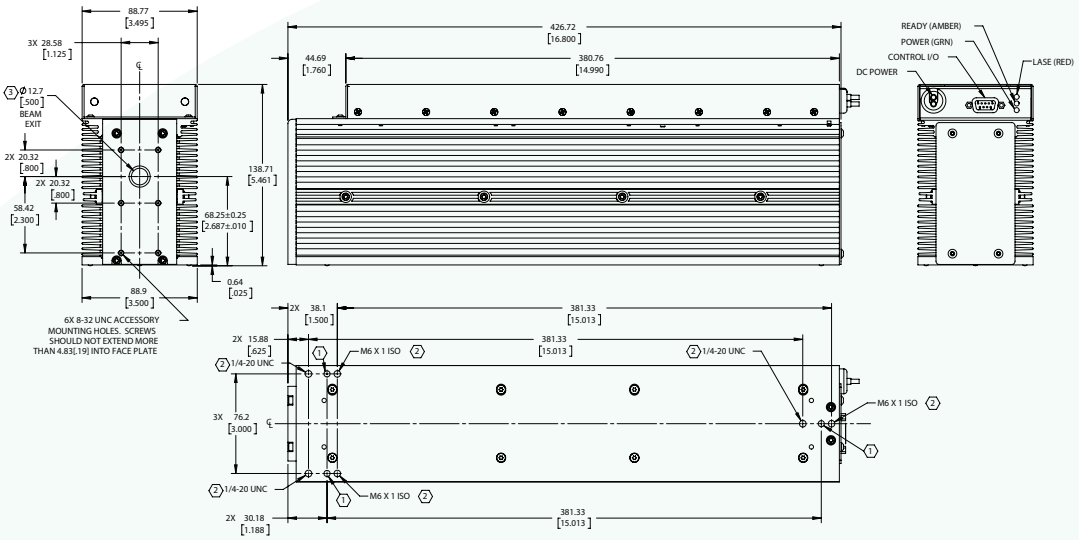

NOTES:

1. HARDENED BALL MOUNTING POINT, 3X (Ø.1875 BALL BEARING).
2. THIS MOUNTING HOLE PATTERN USED FOR BOTTOM ACCESS FASTENING.
3. BEAM PATH MAY NOT BE CENTERED OR PERPENDICULAR TO FACE PLATE APERTURE.

vi30+

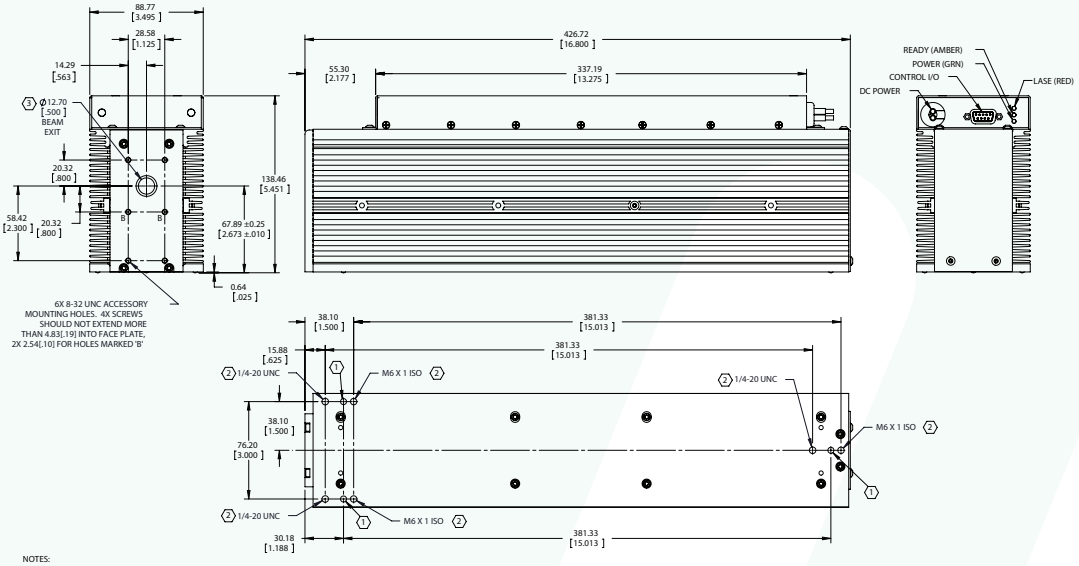

NOTES:

1. HARDENED BALL MOUNTING POINT, 3X (Ø.1875 BALL BEARING).
2. THIS MOUNTING HOLE PATTERN USED FOR BOTTOM ACCESS FASTENING.
3. BEAM PATH MAY NOT BE CENTERED OR PERPENDICULAR TO FACE PLATE APERTURE.

CONTACT US

Americas, Asia Pacific
Novanta Headquarters
Bedford, USA
P +1-781-266-5700

Photonics@Novanta.com

Europe, Middle East, Africa
Novanta Europe GmbH
Wackersdorf, Germany
P +49 9431 7984-0

Milan, Italy
P +39-039-793-710

Photonics@Novanta.com

China
Novanta Sales & Service Office
Shenzhen, China
P +86-755-8280-5395

Suzhou, China
P +86-512-6283-7080

Photonics.China@Novanta.com

Japan
Novanta Service & Sales Office
Tokyo, Japan
P +81-3-5753-2460

Photonics.Japan@Novanta.com